D4 miniature switch with RAST 2.5 connector

Technical specifications

Switched current max.	< 0,1 up to 6 A, depending on model
Ambient temperature	40T85

All other technical specifications are identical with D4 miniature switch (please see page 28)

Features

- RAST 2,5 connection technology with integrated connector housing for external locking
- Connector keying: R2,5/2-3adef according to RAST 2,5-Standard
- Case-sided wire direction
- Preferred connecting system in the white goods industry
- Cost-effective plug-system for the standardization of wire harness assemblies

Dimensions in mm

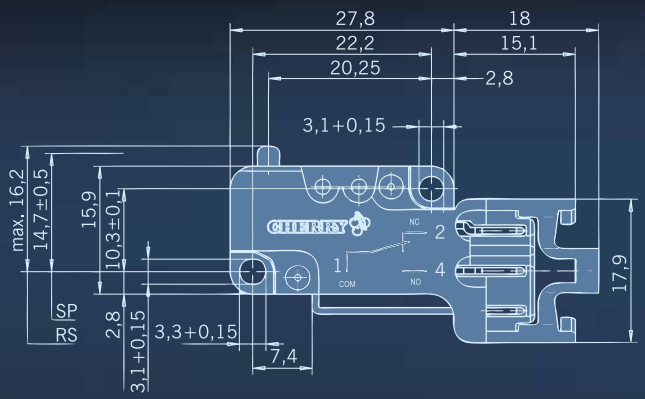
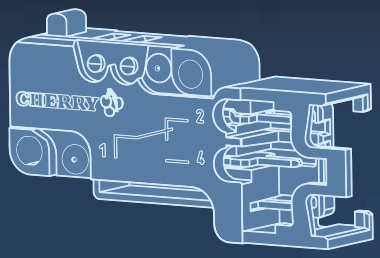
Terminals D4 RAST 2,5